MINI Compression Fittings

TC SERIES

Product features

- The Mini Compression Fittings
- The Mini Compression Fittings are used in Nylon Tube extensively and are able to bear high pressure

Speciality

Fluid	Air (no other gases or liquids)
Operating Pressure	0～1.0 MPa (150psi)
Max Pressure	-100Kpa (-29.5 in ·Hg)
Operating Temperature	-60℃(32-140 ℉)
Applicable Tube	Polyurethane and Nylon

Dimension

TC — Two Touch Fitting

04 — Tube Dia Code

Code	O.D	I.D
04	Φ04	Φ2.5
06	Φ06	Φ4
08	Φ08	Φ5.5

-

01 — Thread Size

Code	Metric Thread Size
M3	M3x05
M5	M5X0.8
M6	M6X1
01	G1/8

Dimension
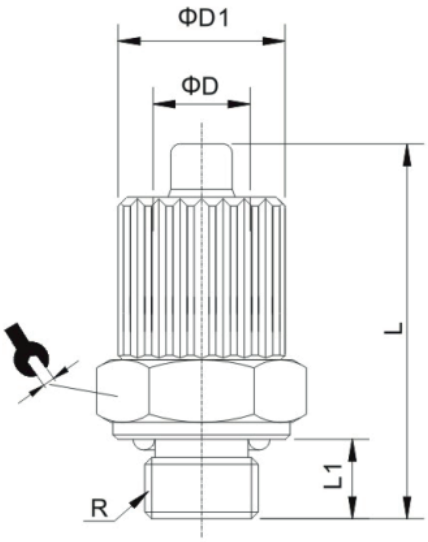
MODEL	ΦD	R	L1	L	ΦD1	
TC03-M3	3	M3X0.5	3	15.2	6	7
TC03-M5	3	M5X0.8	4	15.5	6	7
TC04-M3	4	M3X0.5	3	17	7.5	8
TC04-M5	4	M5X0.8	3.5	17	7.5	8
TC04-M6	4	M6X1.0	4	17	7.5	10
TC04-G01	4	G1/8	5.5	20	7.5	13
TC06-M5	6	M5X0.8	4	20.8	9.5	10
TC06-M6	6	M6X1.0	4	20.8	9.5	10
TC06-G01	6	G1/8	5.5	23.3	9.5	14