MINI Compression Fittings

PTL SERIES

Product features

- The Mini Compression Fittings
- The Mini Compression Fittings are used in Nylon Tube extensively and are able to bear high pressure

Speciality

Fluid	Air (no other gases or liquids)
Operating Pressure	0～1.0 MPa (150psi)
Max Pressure	-100Kpa (-29.5 in ·Hg)
Operating Temperature	-60℃(32-140 ℉)
Applicable Tube	Polyurethane and Nylon

Dimension

TC **04** - **01**

Two Touch Fitting

Tube Dia Code

Code	O.D	I.D
04	Φ04	Φ2.5
06	Φ06	Φ4
08	Φ08	Φ5.5

Thread Size

Code	Metric Thread Size
M3	M3x05
M5	M5X0.8
M6	M6X1
01	G1/8

Dimension
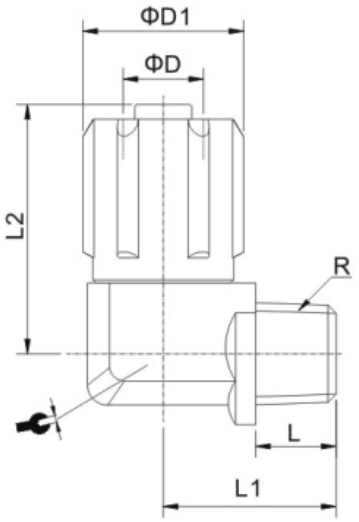
MODEL	ΦD	R	L	L1	L2	ΦD1	
PTL06-01	6	R1/8	8	17	22	14	12
PTL06-02	6	R1/4	11	20	22	14	12
PTL08-01	8	R1/8	8	17	23.5	16	12
PTL08-02	8	R1/4	11	20	23.5	16	12